HB -SERIES

ZGSM

SAVE TODAY'S ENERGY FOR TOMORROW

UKAS QUALITY MANAGEMENT ISO9001 ISO14001

POWERED BY INVENTRONICS

UL CERTIFIED SAFETY US/CA E466856 | DLC QPL LISTED | LM-79 LM-80 | IP66 IK10 | LUMILEDS The Brighter Choice

TÜV SÜD GS | CE CB | RoHS Compliant | SAA APPROVALS | MW

7 YEAR WARRANTY

LED BAY/FLOOD LIGHTS

Overview

The ZGSM® HB-Series LED bay/flood lights are using LUMILEDS® luminous source, providing excellent lumen output, long-lasting stability and splendid sight.

The ZGSM HB-Series LED bay/flood lights have a high luminous efficiency and better service life. Provide 7 years warranty on luminaire.

Color Options

- Silver Gray

HIGH-EFFICACY LED LIGHT SOURCE

Lumileds Luxeon TX
Greater than 135lm/W high efficacy, illumination grade LED light source.

Lumileds 3030 2D
Greater than 150lm/W high efficacy, illumination grade LED light source.

Lumileds 5050
Greater than 185lm/W high efficacy, illumination grade LED light source.

HIGH-END LED DRIVER (Two options)

+ NON-DIMMABLE

High-end Mean Well HLG Series LED driver, optimal stability, performance and lifespan.

+ DIMMABLE

POWERED BY INVENTRONICS

High-end Inventronics programmable LED driver, integrate dimming function and 6KV /10KV surge protection. Provide excellent performance and lifespan.

AIR CONVECTION EFFECT

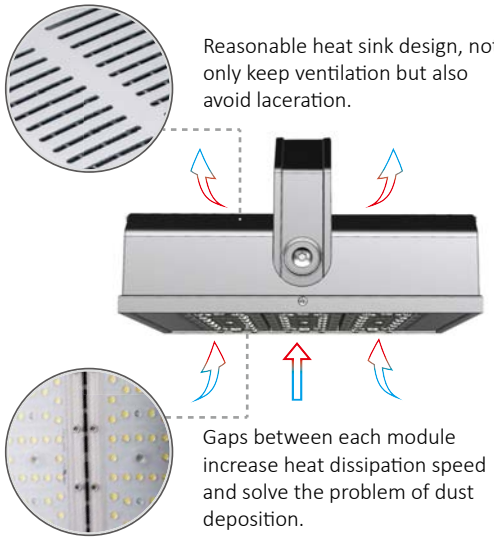

Reasonable heat sink design, not only keep ventilation but also avoid laceration.

Gaps between each module increase heat dissipation speed and solve the problem of dust deposition.

FLEXIBLE COMBINATIONS OF MODULES

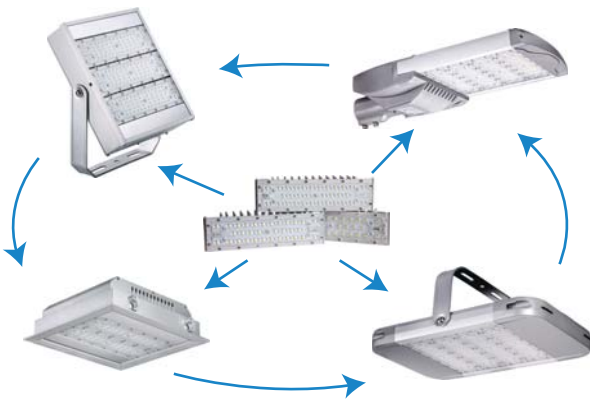

ZGSM
SAVE TODAY'S ENERGY FOR TOMORROW

Optics

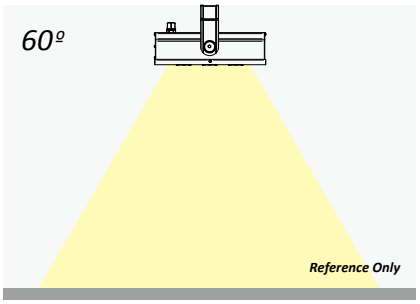

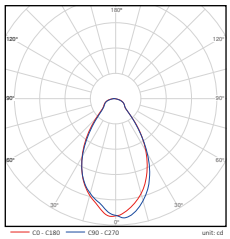

Lens code: 60º

Applications:
Bay Light: Shelf Aisle | High Hall | High Workshop
Flood Light: Billboard | Area | Architecture | Landscape Lighting

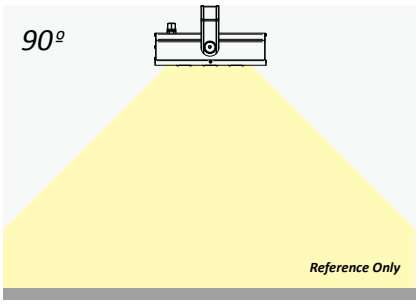

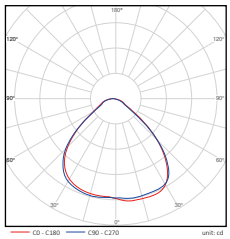

Lens code: 90º

Applications:
Bay Light: Warehouse | Workshop
Flood Light: Billboard | Area | Architecture | Landscape Lighting

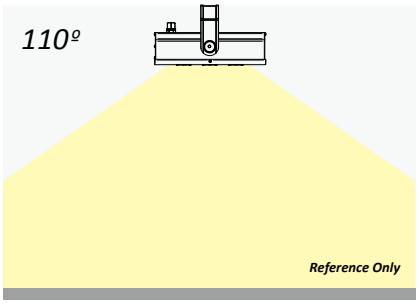

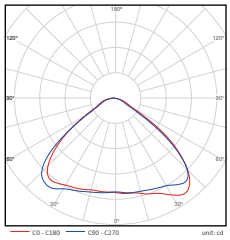

Lens code: 110º

Applications:
Bay Light: Warehouse | Workshop | Gas Station
Flood Light: Billboard | Area | Architecture | Landscape Lighting

Design Features

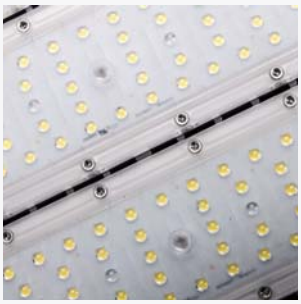

Professional lens design with 60°, 90° and 110° optional.

Use M16 waterproof connector, avoid hard power damage.

Full aluminum made, sufficient heat dissipation area also no corrosion worries.

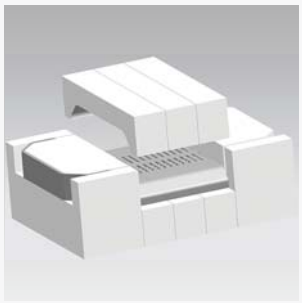

A special tailormade packaging designed to guarantee the highest protection of the lamp.

Use waterproof connector for internal wiring, safe, convenient & fast.

Innovative pluggable connector, clean & efficient.

UL standard connection.

The exquisite and innovated frame holder not only makes the installation more simple but also firmer.

DETAILED FEATURES

ZGSM
SAVE TODAY'S ENERGY FOR TOMORROW

Electrical & Photometric

★ 3030 Version

Number of Modules	Model*1	LED Working Current	Power	Luminaire Efficacy (+/- 5%)	Lumen Output (+/- 5%)	Input Voltage	LED Brand	Driver Brand	Light Distributions	CCT (K)	Lifetime (h)
1	ZGSM-GCD40H4B ZGSM-FGD40H4B	95mA	40W	140 lm /w	5600 lm	100-240V /277V AC 50 /60Hz	Lumileds 3030 2D	MeanWell Inventronics	60° 90° 110°	3000*2 4000 5000 5700	>100,000 (L70)
	ZGSM-GCD50H5B ZGSM-FGD50H5B	115mA	50W	130 lm /w	6500 lm						
	ZGSM-GCD60H6B ZGSM-FGD60H6B	145mA	60W	125 lm /w	7500 lm						
2	ZGSM-GCD80H4B ZGSM-FGD80H4B	100mA	80W	140 lm /w	11200 lm						
	ZGSM-GCD100H5B ZGSM-FGD100H5B	120mA	100W	130 lm /w	13000 lm						
	ZGSM-GCD120H6B ZGSM-FGD120H6B	145mA	120W	125 lm /w	15000 lm						
3	ZGSM-GCD120H4B ZGSM-FGD120H4B	100mA	120W	140 lm /w	16800 lm						
	ZGSM-GCD150H5B ZGSM-FGD150H5B	120mA	150W	130 lm /w	19500 lm						
	ZGSM-GCD180H6B ZGSM-FGD180H6B	145mA	180W	125 lm /w	22500 lm						
4	ZGSM-GCD160H4B ZGSM-FGD160H4B	100mA	160W	140 lm /w	22400 lm						
	ZGSM-GCD200H5B ZGSM-FGD200H5B	120mA	200W	130 lm /w	26000 lm						
	ZGSM-GCD240H6B ZGSM-FGD240H6B	145mA	240W	125 lm /w	30000 lm						
5	ZGSM-GCD200H4B ZGSM-FGD200H4B	100mA	200W	140 lm /w	28000 lm						
	ZGSM-GCD240H5B ZGSM-FGD240H5B	120mA	240W	130 lm /w	31200 lm						

*1 Model of Bay Light: ZGSM-GCDXXHXB | Model of Flood Light: ZGSM-FGDXXHXB.
*2 Luminous Efficacy of 3000K is 5% lower than other CCTs.

★ 5050 Version

Number of Modules	Model*1	LED Working Current	Power	Luminaire Efficacy (+/- 5%)	Lumen Output (+/- 5%)	Input Voltage	LED Brand	Driver Brand	Light Distributions	CCT (K)	Lifetime (h)
1	ZGSM-GCD40H4B ZGSM-FGD40H4B	48mA	40W	165 lm /w	6600 lm	100-240V /277V AC 50 /60Hz	Lumileds 5050	MeanWell Inventronics	110°	3000*2 4000 5000 5700	>100,000 (L70)
	ZGSM-GCD50H5B ZGSM-FGD50H5B	59mA	50W	160 lm /w	8000 lm						
	ZGSM-GCD60H6B ZGSM-FGD60H6B	75mA	60W	155 lm /w	9300 lm						
2	ZGSM-GCD80H4B ZGSM-FGD80H4B	50mA	80W	165 lm /w	13200 lm						
	ZGSM-GCD100H5B ZGSM-FGD100H5B	61mA	100W	160 lm /w	16000 lm						
	ZGSM-GCD120H6B ZGSM-FGD120H6B	75mA	120W	155 lm /w	18600 lm						
3	ZGSM-GCD120H4B ZGSM-FGD120H4B	50mA	120W	165 lm /w	19800 lm						
	ZGSM-GCD150H5B ZGSM-FGD150H5B	58mA	150W	160 lm /w	24000 lm						
	ZGSM-GCD180H6B ZGSM-FGD180H6B	75mA	180W	155 lm /w	27900 lm						
4	ZGSM-GCD160H4B ZGSM-FGD160H4B	50mA	160W	165 lm /w	26400 lm						
	ZGSM-GCD200H5B ZGSM-FGD200H5B	58mA	200W	160 lm /w	32000 lm						
	ZGSM-GCD240H6B ZGSM-FGD240H6B	75mA	240W	155 lm /w	37200 lm						
5	ZGSM-GCD200H4B ZGSM-FGD200H4B	50mA	200W	165 lm /w	33000 lm						
	ZGSM-GCD240H5B ZGSM-FGD240H5B	61mA	240W	160 lm /w	38400 lm						

*1 Model of Bay Light: ZGSM-GCDXXHXB | Model of Flood Light: ZGSM-FGDXXHXB.
*2 Luminous Efficacy of 3000K is 5% lower than other CCTs.

ZGSM
SAVE TODAY'S ENERGY FOR TOMORROW

★ **3535 Version**

Number of Modules	Model*[1]	LED Working Current	Power	Luminaire Efficacy (+/- 5%)	Lumen Output (+/- 5%)	Input Voltage	LED Brand	Driver Brand	Light Distributions	CCT (K)	Lifetime (h)
1	ZGSM-GCD40HB ZGSM-FGD40HB	860mA	40W	110 lm /w	4400 lm	100-240V /277V AC 50 /60Hz	Lumileds Luxeon TX	MeanWell Inventronics	60° 90° 110°	3000*[2] 4000 5000 5700	>100,000 (L70)
2	ZGSM-GCD80HB ZGSM-FGD80HB	900mA	80W	110 lm /w	8800 lm						
3	ZGSM-GCD120HB ZGSM-FGD120HB	900mA	120W	110 lm /w	13200 lm						
4	ZGSM-GCD160HB ZGSM-FGD160HB	900mA	160W	110 lm /w	17600 lm						
5	ZGSM-GCD200HB ZGSM-FGD200HB	900mA	200W	110 lm /w	22000 lm						
6	ZGSM-GCD240HB ZGSM-FGD240HB	900mA	240W	110 lm /w	26400 lm						

*[1] Model of Bay Light: ZGSM-GCDXXHXB | Model of Flood Light: ZGSM-FGDXXHXB.
*[2] Luminous Efficacy of 3000K is 5% lower than other CCTs.

Working Environment & Packing

Number of Modules	Product Dimensions (mm)	Carton Size (mm)	N.W (kg)	G.W (kg)	Working Environment	Storage Temperature	Rating	CRI	Power Factor	Power Efficiency	Material
1	166*270*165(Bay Light) 166*270*190(Flood Light)	285*370*200	2.4	3.1	-40 ºC ~ +50 ºC 10% ~ 90%RH	-40 ºC ~ +50 ºC	Class I IP66 IK10	>70	>0.95	>90%	Housing: Aluminium Alloy; Lens: PC
2	239*270*165(Bay Light) 239*270*227(Flood Light)	355*370*200	3.6	4.4							
3	312*270*165(Bay Light) 312*270*263(Flood Light)	430*370*200	4.5	5.4							
4	385*270*165(Bay Light) 385*270*300(Flood Light)	505*370*200	5.4	6.3							
5	458*270*165(Bay Light) 458*270*336(Flood Light)	580*370*200	6.3	7.2							
6	531*270*165(Bay Light) 531*270* 373(Flood Light)	650*370*200	7.1	8.1							

Note: Above data of weight are all typical values.

Certification

Manufacturer
ISO9001, ISO14001
HB Series [ZGSM-GCD40HB, ZGSM-GCD80HB, ZGSM-GCD120HB, ZGSM-GCD160HB, ZGSM-GCD200HB, ZGSM-GCD240HB]
HB Series [ZGSM-FGD40HB, ZGSM-FGD80HB, ZGSM-FGD120HB, ZGSM-FGD160HB, ZGSM-FGD200HB, ZGSM-FGD240HB]
CE, ROHS, GS, CB, SAA, UL, cUL, DLC, LM79, LM80
H4B/H5B Series [ZGSM-GCD40H4B, ZGSM-GCD80H4B, ZGSM-GCD120H4B, ZGSM-GCD160H4B, ZGSM-GCD200H4B | ZGSM-GCD50H5B, ZGSM-GCD100H5B, ZGSM-GCD150H5B, ZGSM-GCD200H5B, ZGSM-GCD240H5B]
H4B/H5B Series [ZGSM-FGD40H4B, ZGSM-FGD80H4B, ZGSM-FGD120H4B, ZGSM-FGD160H4B, ZGSM-FGD200H4B | ZGSM-FGD50H5B, ZGSM-FGD100H5B, ZGSM-FGD150H5B, ZGSM-FGD200H5B, ZGSM-FGD240H5B]
CE, ROHS, LM80
H6B Series [ZGSM-GCD60H6B, ZGSM-GCD120H6B, ZGSM-GCD180H6B, ZGSM-GCD240H6B | ZGSM-FGD60H6B, ZGSM-FGD120H6B, ZGSM-FGD180H6B, ZGSM-FGD240H6B]
CE, ROHS, LM80

Variety applications

Bay light with short bracket

Flood light with long bracket

ZGSM
SAVE TODAY'S ENERGY FOR TOMORROW

Installation of Bay Light

★ **Mounting Bracket**

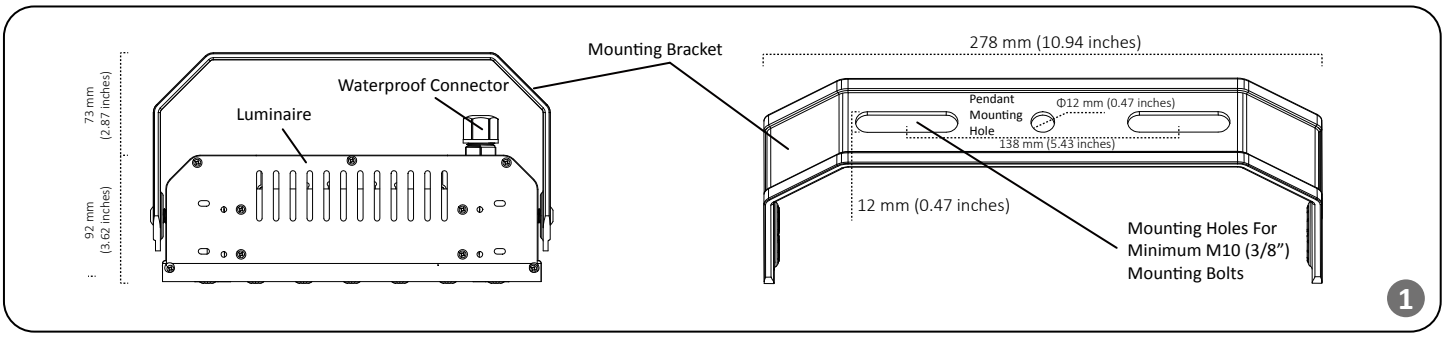

★ **Direct Mounting**

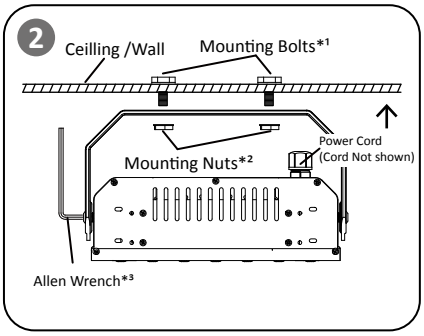

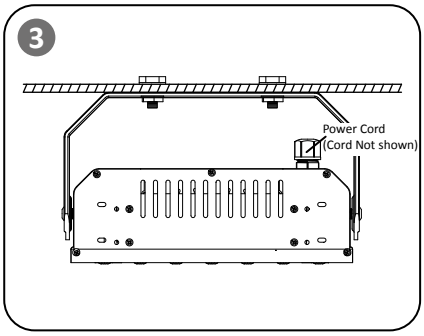

*1 Minimum M10 (3/8") Bolts (not-provided) *2 Mounting Nuts are not provided *3 Allen Wrench: 8mm (5/16")

STEP 1:
Assemble the mounting bracket to the fixture by provided M10 (3/8") round head screws.

STEP 2:
Mount the fixture by two(2) minimum M10 (3/8") bolts. See image **2.**

STEP 3:
Loosen the mounting bracket screws, adjust the fixture to desired position, re-secure the screws.

STEP 4:
Connect the **Power Cord** to the supply wiring per "**Electrical Connections**" section for completing electrical connections.

★ **Pendant Mounting**

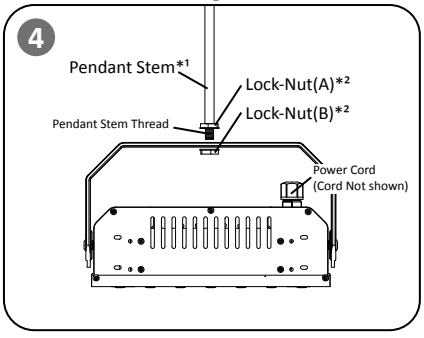

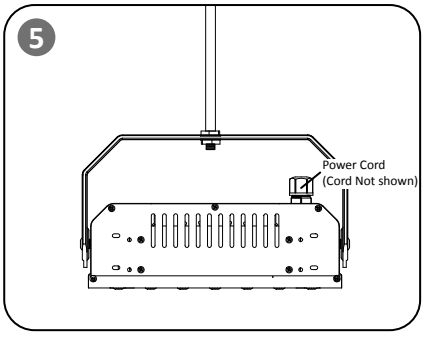

*1 Pendant Stem can not be the soft material (not-provided)

*2 Look Nuts are not provided

STEP 1:
Assemble the mounting bracket to the fixture by provided M10 (3/8") round head screws.

STEP 2:
Attach Lock-Nut(A) to the bottom of the Pendant Stem. Attach Lock-Nut(B) by holding the interjacent Fixture Bracket and tightening Lock-Nut(B) until secure. See image **4.**

STEP 3:
Loosen the mounting bracket screws, adjust the fixture to desire position, re-secure the screws.

STEP 4:
Connect the **Power Cord** to the supply wiring per "**Electrical Connections**" section for completing electrical connections.

Installation of Flood Light

★ **Direct Mounting**

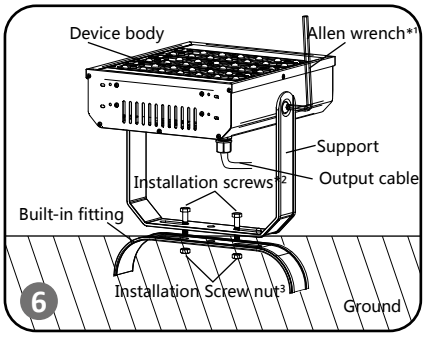

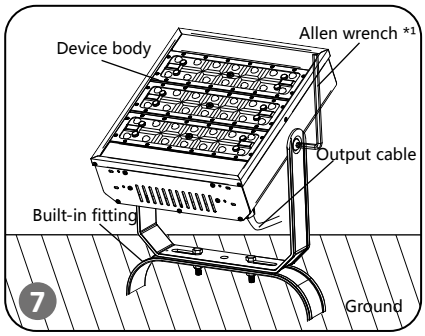

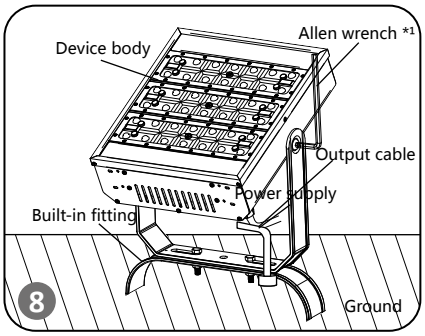

*1 Allen wrench: 8mm(5/16") *2 Minimum M10(3/8") screws (Not provided) *3 Screw nuts (Not provided)

STEP 1: Use an Allen wrench to fix the body and the support (is not necessary to tighten the screws too hard). Align support and built-in fitting, tighten the screws as image **6**.

STEP 2: Settle in the adequate angle position and use Allen screw to fix it as image **7**.

STEP 3: Connect wire as image **8**.

ZGSM
SAVE TODAY'S ENERGY FOR TOMORROW

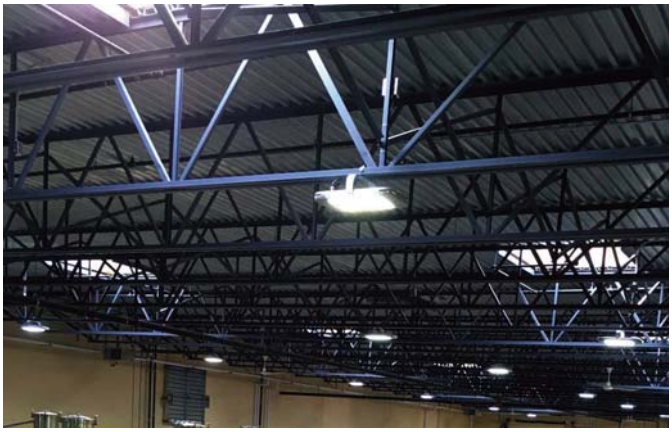

- for Low Bay Applications(Series-H), Canada

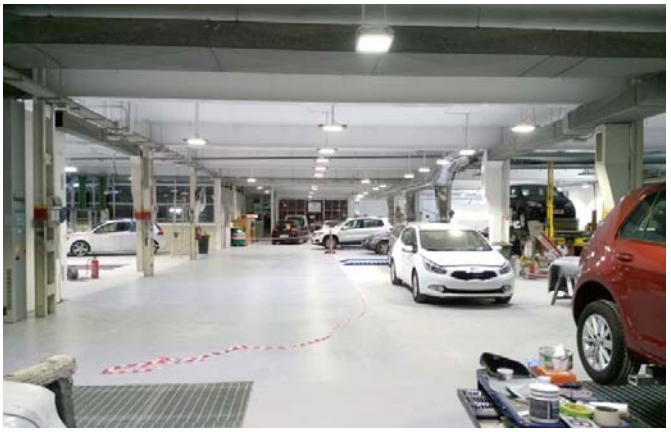

- for Low Bay Applications(Series-H), Spain

- for Low Bay Applications(Series-H), Italy

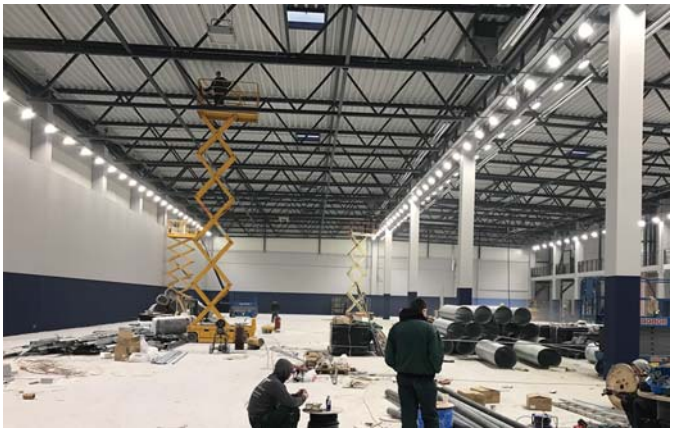

- for flood light Applications(Series-HB), Lithuania

- for flood light Applications(Series-HB), Czech Republic

- for flood light Applications(Series-HB), Dubai

ZGSM
SAVE TODAY'S ENERGY FOR TOMORROW